FIRST MATE

5801 Eubank Blvd NE, Albuquerque, NM 87111, USA
11/20/2026

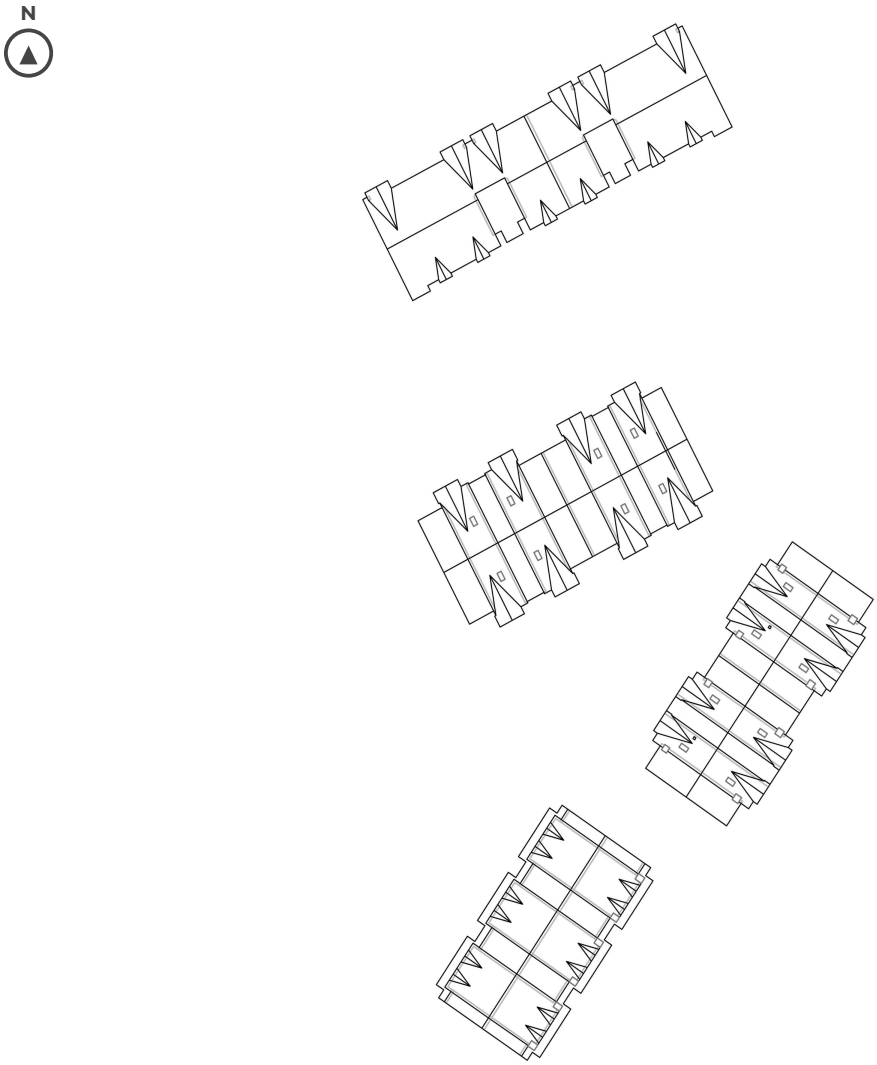

PROJECT SUMMARY

Total Facets: 144
Predominant Pitch: 4/12

Total Squares (Net): 288.78
Total Squares (25% Waste): 360.98

MEASUREMENT BREAKDOWN

Eave:	1045'
Rake:	2388'
Ridge:	1015'
Valley:	1144'
Skylight:	180'
Headwall Flashing:	397'
Sidewall Flashing:	1361'
Protrusion:	8'

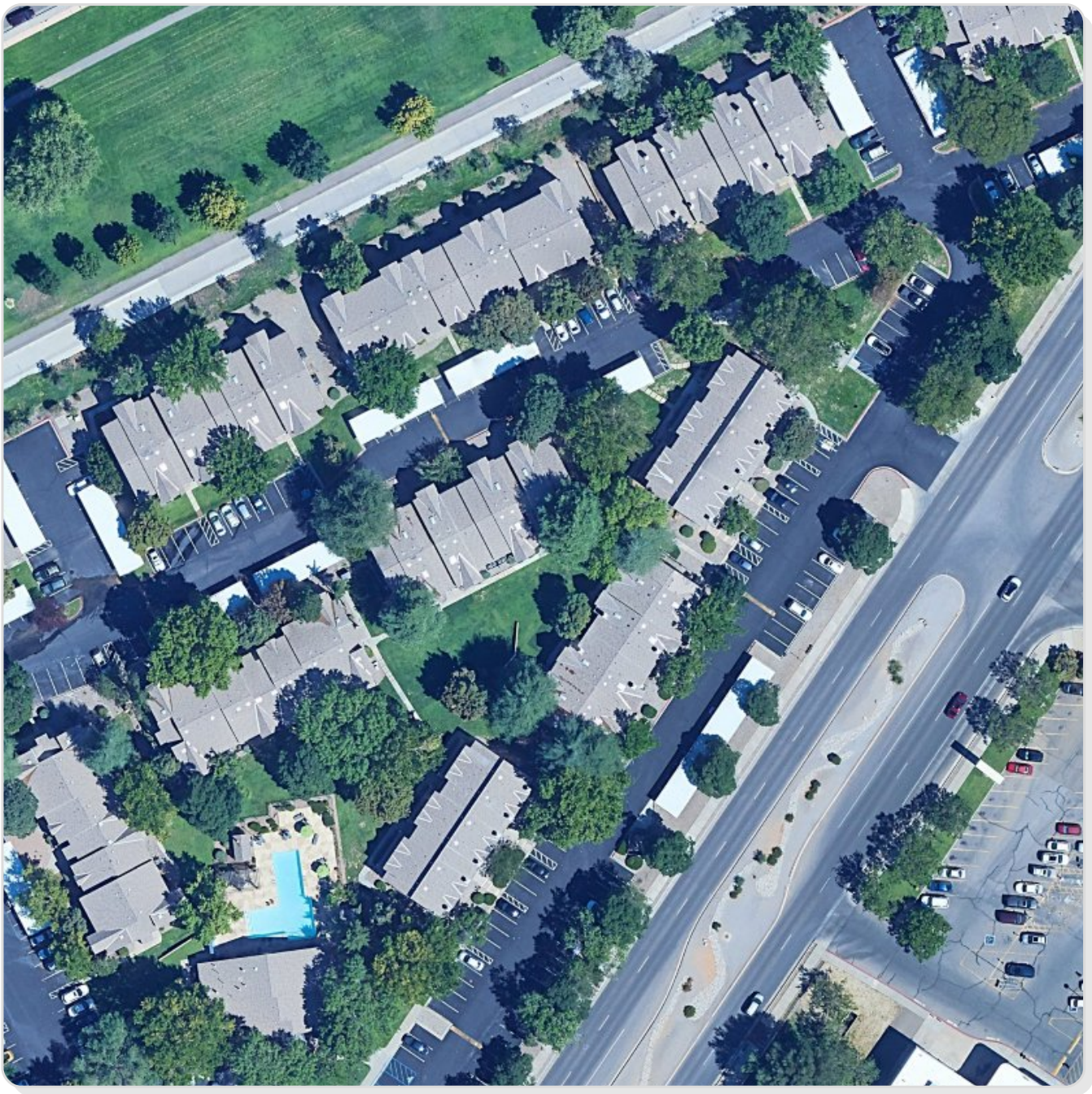

Southwest

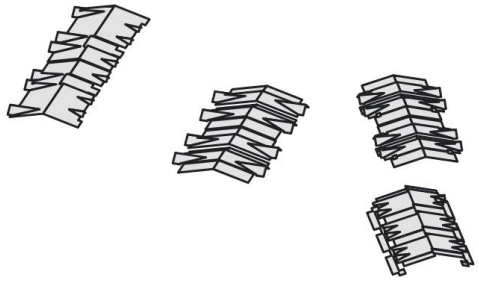

Southeast

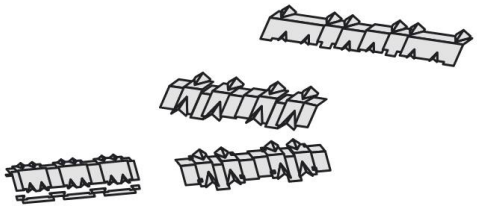

Northwest

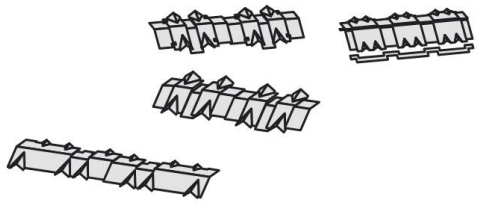

Northeast

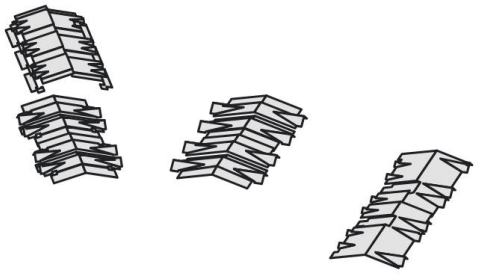

Total Facets: 144

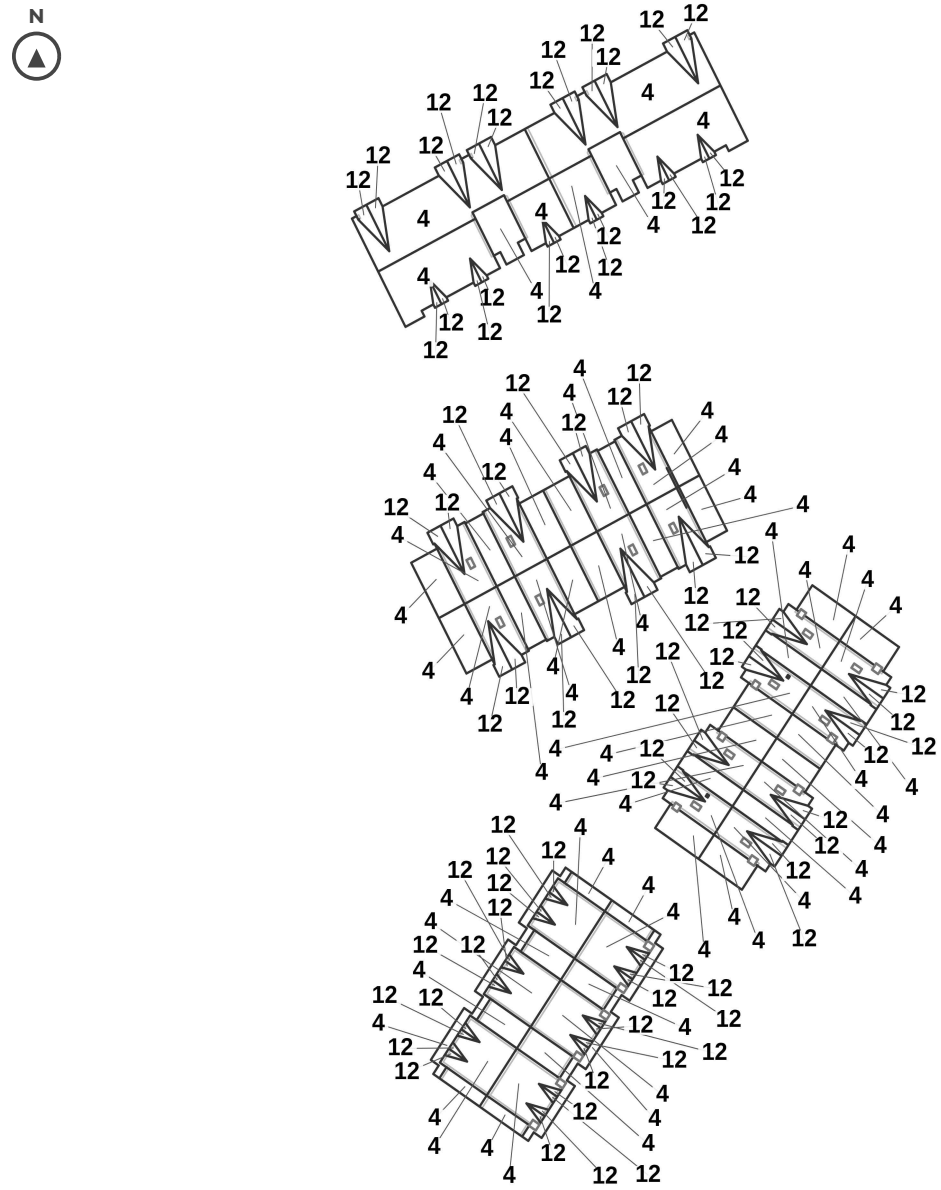

PITCH BREAKDOWN

Pitch	Area	Percent
4/12	**241.80**	**84%**
12/12	46.98	16%

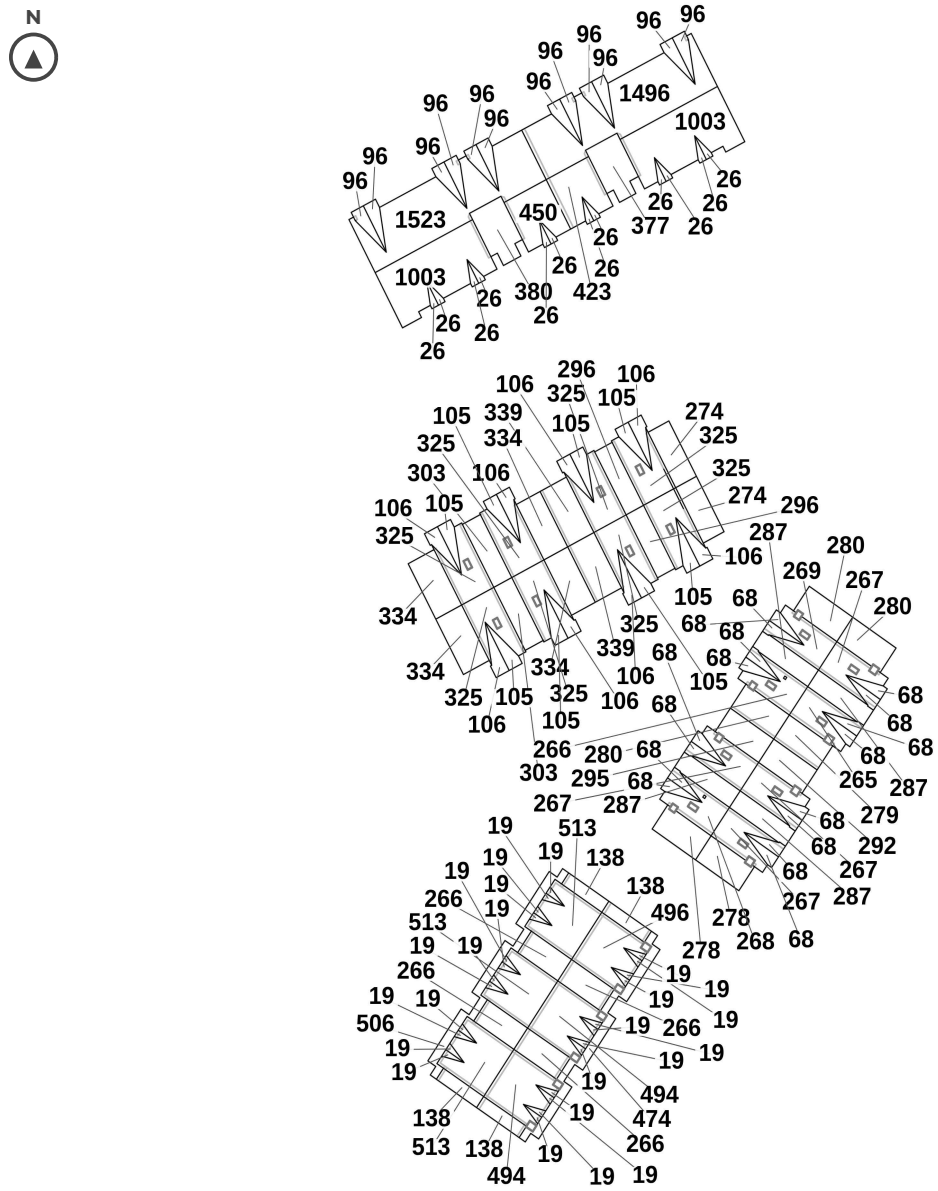
N
96 96 96



Ridge Valley Rake Eave Headwall Flashing

Sidewall Flashing Protrusion

LAYER 1 DETAILS

Facets: 40 **Squares Without Waste: 60.8** **Squares With Waste: 76**

Rake: 545' Eave: 313' Ridge: 108' Valley: 240' Headwall Flashing: 391'

Sidewall Flashing: 293'

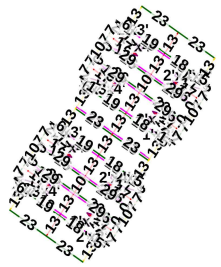

Ridge Valley Rake Eave Headwall Flashing

Sidewall Flashing Protrusion

LAYER 2 DETAILS

Facets: 36 **Squares Without Waste: 66.3** **Squares With Waste: 82.9**

Eave: 210' Ridge: 261' Valley: 259' Rake: 654' Sidewall Flashing: 436'

Protrusion: 8'

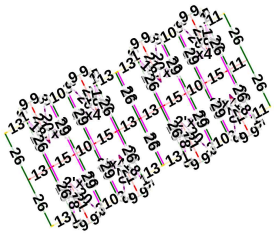

Ridge Valley Rake Eave Headwall Flashing

Sidewall Flashing Protrusion

LAYER 3 DETAILS

Facets: 36 **Squares Without Waste: 80.5** **Squares With Waste: 100.6**

Rake: 763'	Ridge: 300'	Eave: 235'	Valley: 303'	Sidewall Flashing: 494'

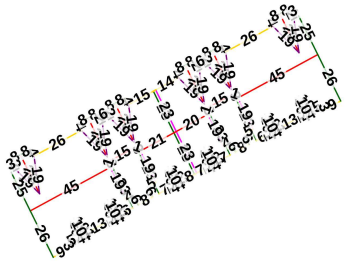

Ridge Valley Rake Eave Headwall Flashing

Sidewall Flashing Protrusion

LAYER 4 DETAILS

Facets: 32 **Squares Without Waste: 81.1** **Squares With Waste: 101.4**

Rake: 425' Ridge: 345' Eave: 287' Valley: 343' Headwall Flashing: 6'

Sidewall Flashing: 138'

Structure Breakdown (1 of 2)

Structure 1

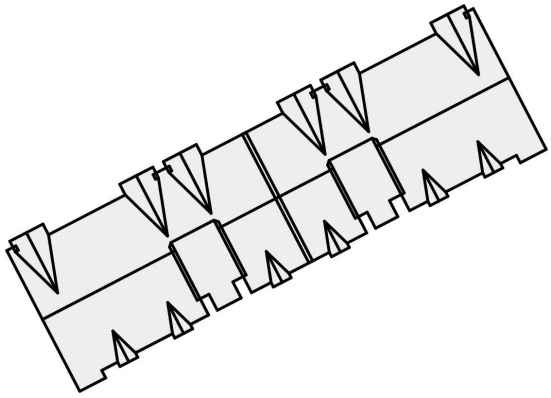

Facets:	32
Pitch:	4/12
Square Feet:	8,111
Squares with Waste (25%):	**102**
Eaves:	287'
Rakes:	425'
Ridges:	345'
Valleys:	343'
Transitions:	144'

Structure 2

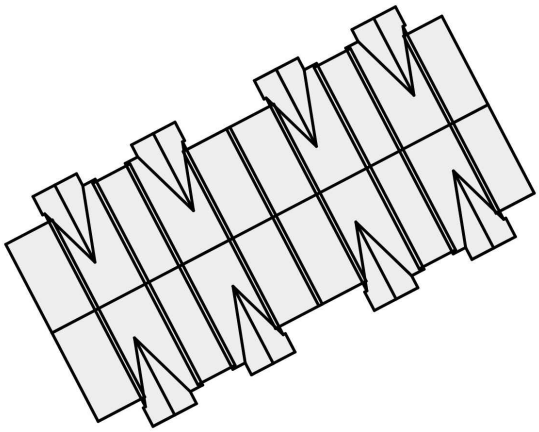

Facets:	36
Pitch:	4/12
Square Feet:	8,050
Squares with Waste (25%):	**101**
Eaves:	235'
Rakes:	763'
Ridges:	300'
Valleys:	303'
Transitions:	494'

Structure Breakdown (2 of 2)

Structure 3

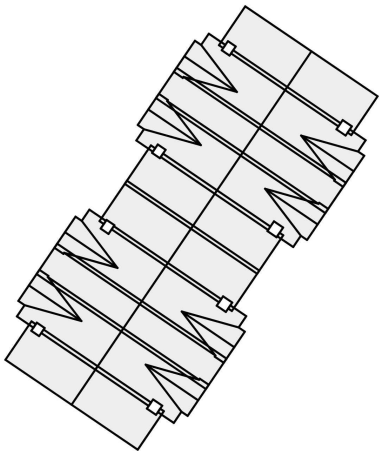

Facets:	36
Pitch:	4/12
Square Feet:	6,635
Squares with Waste (25%):	**83**
Eaves:	210'
Rakes:	654'
Ridges:	261'
Valleys:	259'
Transitions:	436'
Chimneys:	8

Structure 4

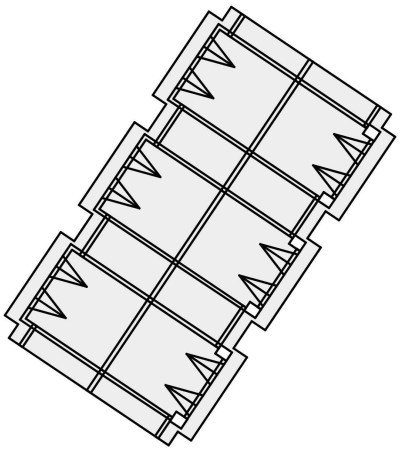

Facets:	40
Pitch:	4/12
Square Feet:	6,083
Squares with Waste (25%):	**77**
Eaves:	313'
Rakes:	545'
Ridges:	108'
Valleys:	240'
Transitions:	685'
Chimneys:	6

Pitch	4/12	12/12
Area (sq ft)	24,180	4,698
Percent	84%	16%

Waste	0%	20%	23%	25%	27%	30%	35%
Area (sq ft)	28,878	34,654	35,520	36,098	36,676	37,542	38,986
Squares	289	347	356	361	367	376	390

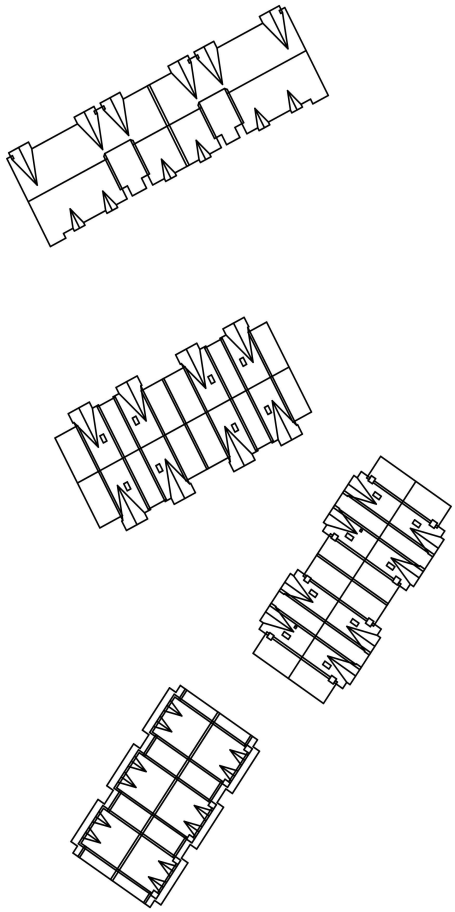

Roof Area	28878 sq ft
Facets	144
Pitch	4 / 12
Skylights	15
Chimneys	15
Ridge	1015 ft
Valley	1144 ft
Rake	2388 ft
Eave	1045 ft
Headwall Flashing	397 ft
Sidewall Flashing	1361 ft
Protrusion	8 ft
Chimney Back Pan	55 ft
Chimney Step	102 ft
Chimney Apron	50 ft
Counter Flashing	207 ft

Measurements rounded. Waste guidance only. Installer to verify.

	Waste	0%	20%	25%	30%
Shingle Products					
GAF Timberline HDZ	bundle	867	1041	**1084**	1128
OC TruDef Duration	bundle	867	1041	**1084**	1128
CertainTeed Landmark	bundle	867	1041	**1084**	1128
Malarkey Vista AR	bundle	867	1041	**1084**	1128
Starter Strip					
GAF Pro-Start	bundle	29	35	**37**	38
OC Starter Strip	bundle	33	40	**42**	43
CertainTeed SwiftStart	bundle	35	42	**44**	46
Malarkey Starter Strip	bundle	35	42	**44**	46
Hip & Ridge Cap					
GAF Seal-A-Ridge	bundle	41	50	**52**	54
OC ProEdge	bundle	31	38	**39**	41
CertainTeed Shadow Ridge	bundle	34	41	**43**	45
Malarkey EZ-Ridge	bundle	41	50	**52**	54
Synthetic Underlayment					
GAF FeltBuster	roll	33	40	**42**	43
OC ProArmor	roll	33	40	**42**	43
CertainTeed RoofRunner	roll	33	40	**42**	43
Malarkey Secure Start Plus	roll	33	40	**42**	43
Ice & Water Shield					
36” perimeter application (19336 sq ft)					
GAF WeatherWatch	roll	97	117	**122**	127
OC WeatherLock Flex	roll	86	104	**108**	112
CertainTeed WinterGuard	roll	100	120	**125**	130
Malarkey Secure Start I&W	roll	97	117	**122**	127
18” perimeter application (14186 sq ft)					
GAF WeatherWatch	roll	71	86	**89**	93
OC WeatherLock Flex	roll	64	77	**80**	84
CertainTeed WinterGuard	roll	73	88	**92**	95
Malarkey Secure Start I&W	roll	71	86	**89**	93

	Waste	0%	20%	25%	30%
Metals & Flashing					
Eave Drip Edge (10 ft)	piece	105	126	**132**	137
Rake Drip Edge (10 ft)	piece	239	287	**299**	311
Valley Metal W (10 ft)	piece	115	138	**144**	150
Step Flashing (5x7)	piece	3132	3759	**3915**	4072
Counter Flashing (10 ft)	piece	157	189	**197**	205
Headwall Flashing (10 ft)	piece	40	48	**50**	52
Chimney Apron (front)	ea	22	27	**28**	29
Chimney Back Pan / Cricket	ea	22	27	**28**	29
Chimney Step Flashing	piece	219	263	**274**	285
Chimney Counter Flash (10 ft)	piece	21	26	**27**	28
Skylight Flashing Kit	kit	15	18	**19**	20
Ventilation					
Ridge Vent (4 ft sections)	piece	254	305	**318**	331
Accessories					
Coil Nails (1.25 in, 50 lb)	box	13	16	**17**	17
Plastic Cap Nails	box	6	8	**8**	8
Roofing Caulk (Tube)	tube	15	18	**19**	20

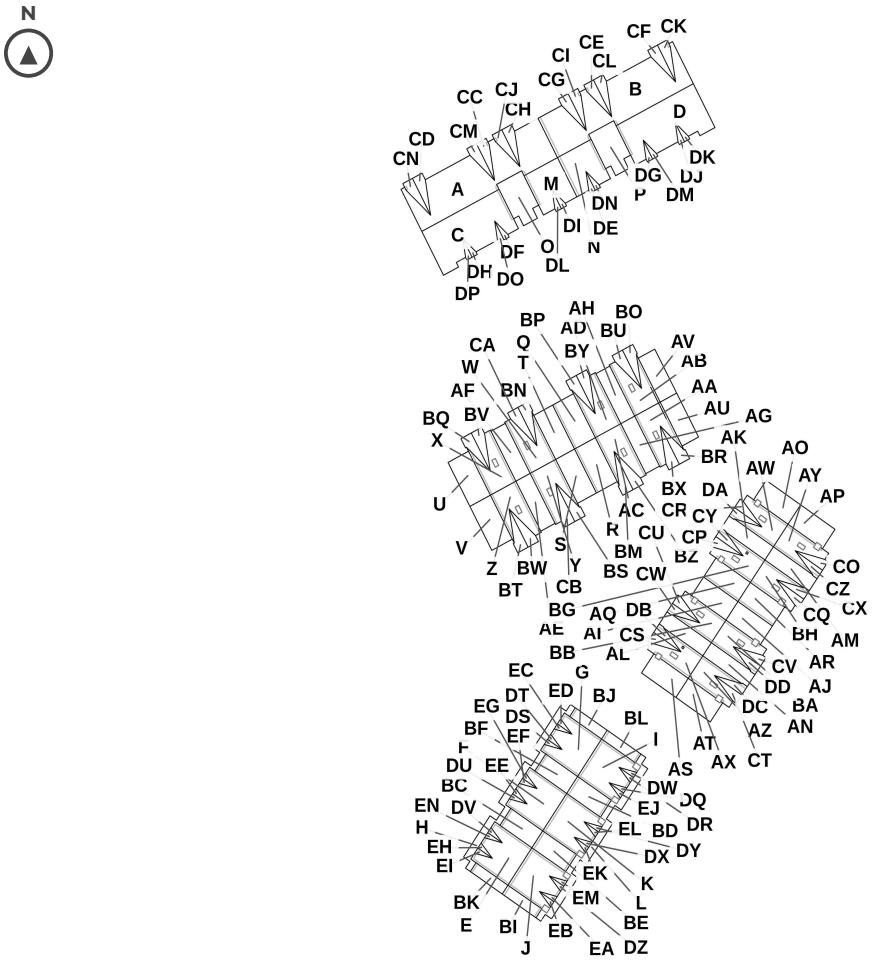

360.98 sq · 4/12 · 144 facets

NOTES