FIRST MATE

4 Wilderness Rd, Chislehurst BR7 5EZ, UK
16/11/2026

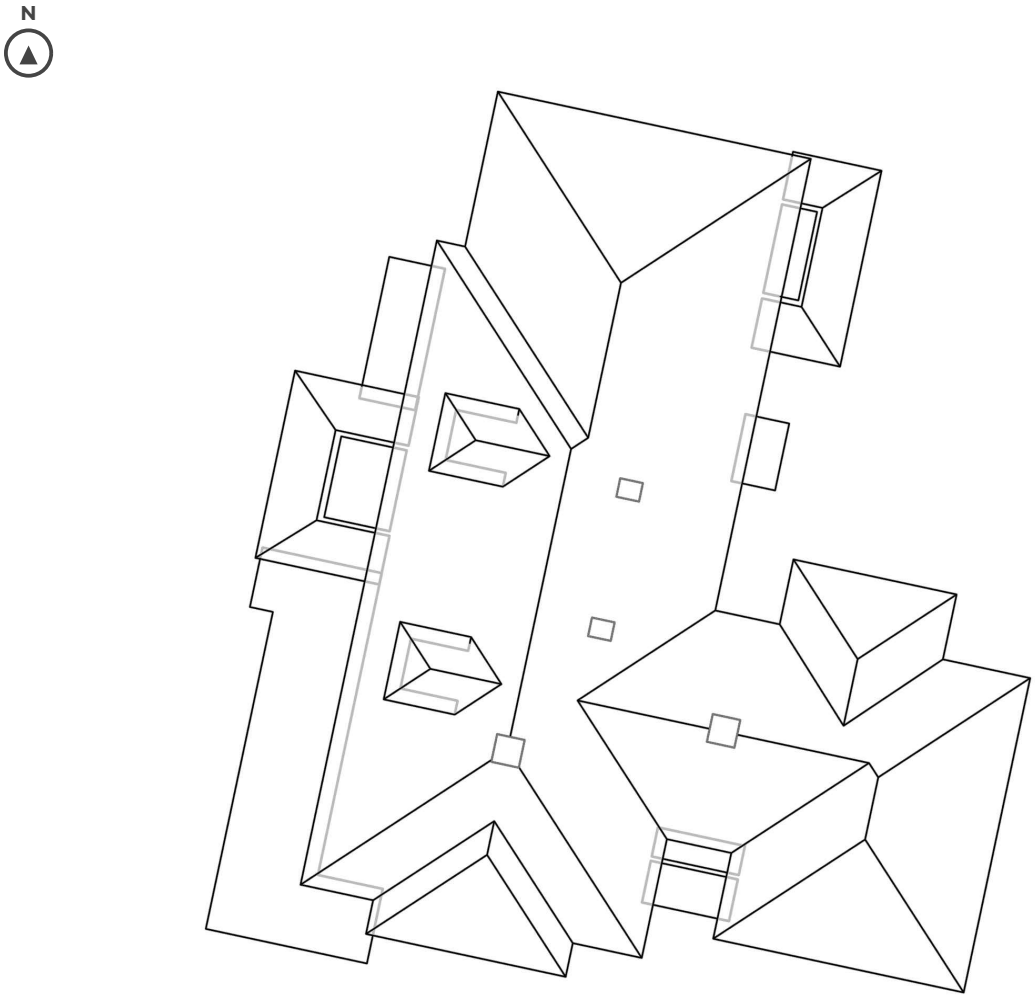

PROJECT SUMMARY

Total Facets: 36
Predominant Pitch: 33.7°

Area (m²) (Net): 619.23
Area (m²) (20% Waste): 743.08

MEASUREMENT BREAKDOWN

Eave:	173.54 m
Hip:	99.8 m
Valley:	53.14 m
Ridge:	33.57 m
Sidewall Flashing:	21.99 m
Parapet Wall:	59.51 m
Headwall Flashing:	14.9 m
Skylight:	6.1 m



Southwest

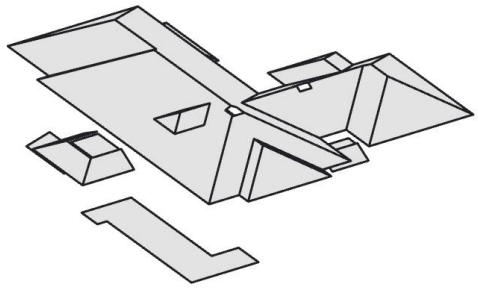

Southeast

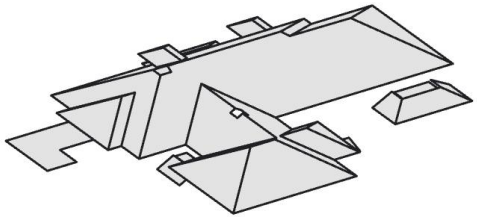

Northwest

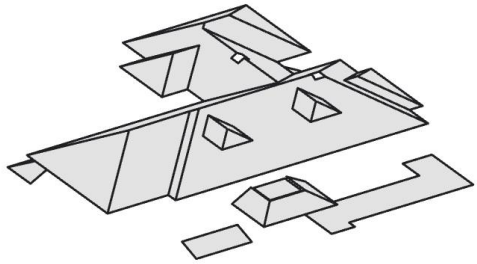

Northeast

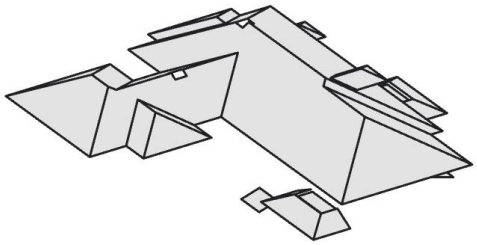

Pitch Diagram

Total Facets: 36

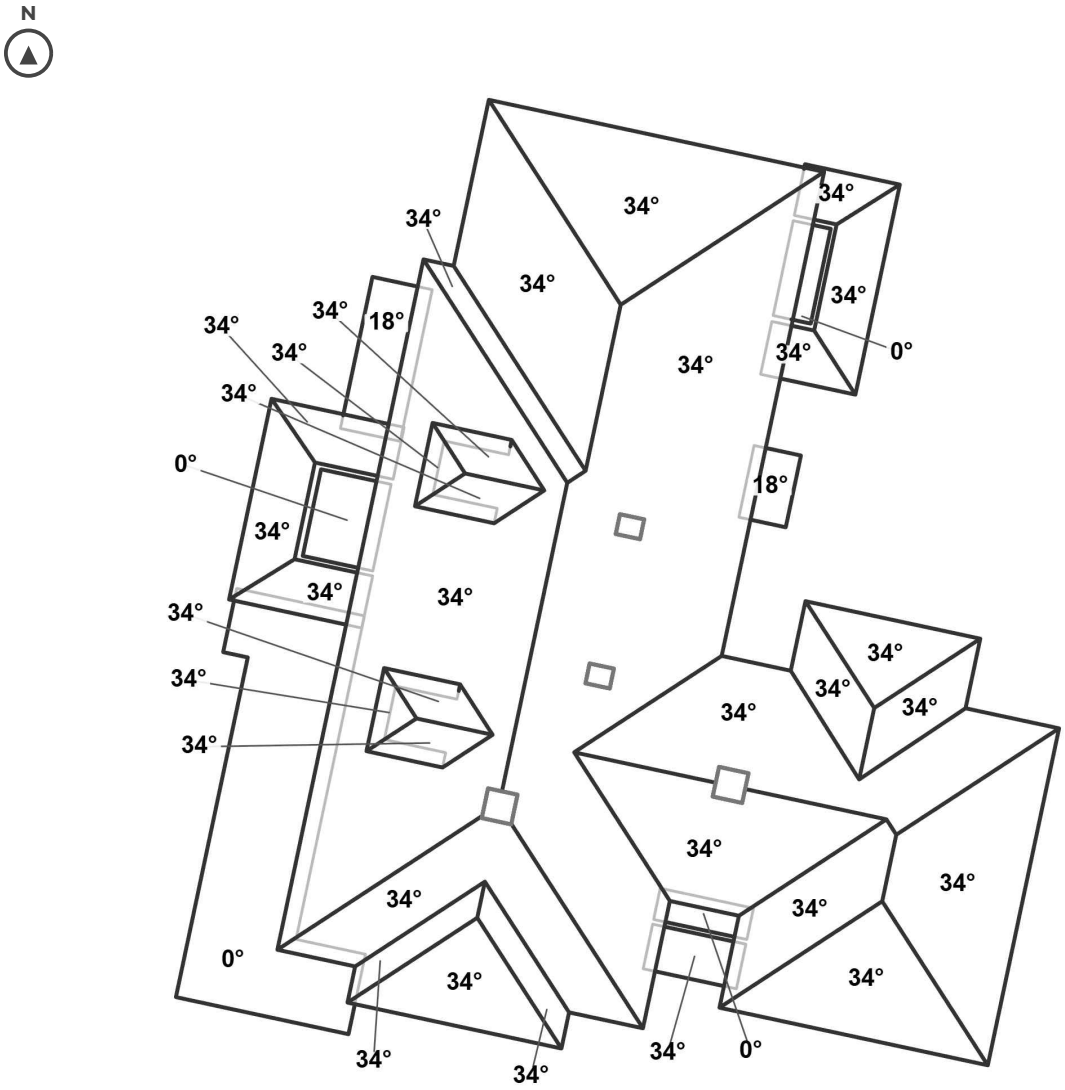

PITCH BREAKDOWN

Pitch	m²	Percent
33.7°	**548.16**	**89%**
0.0°	58.56	9%
18.4°	12.51	2%

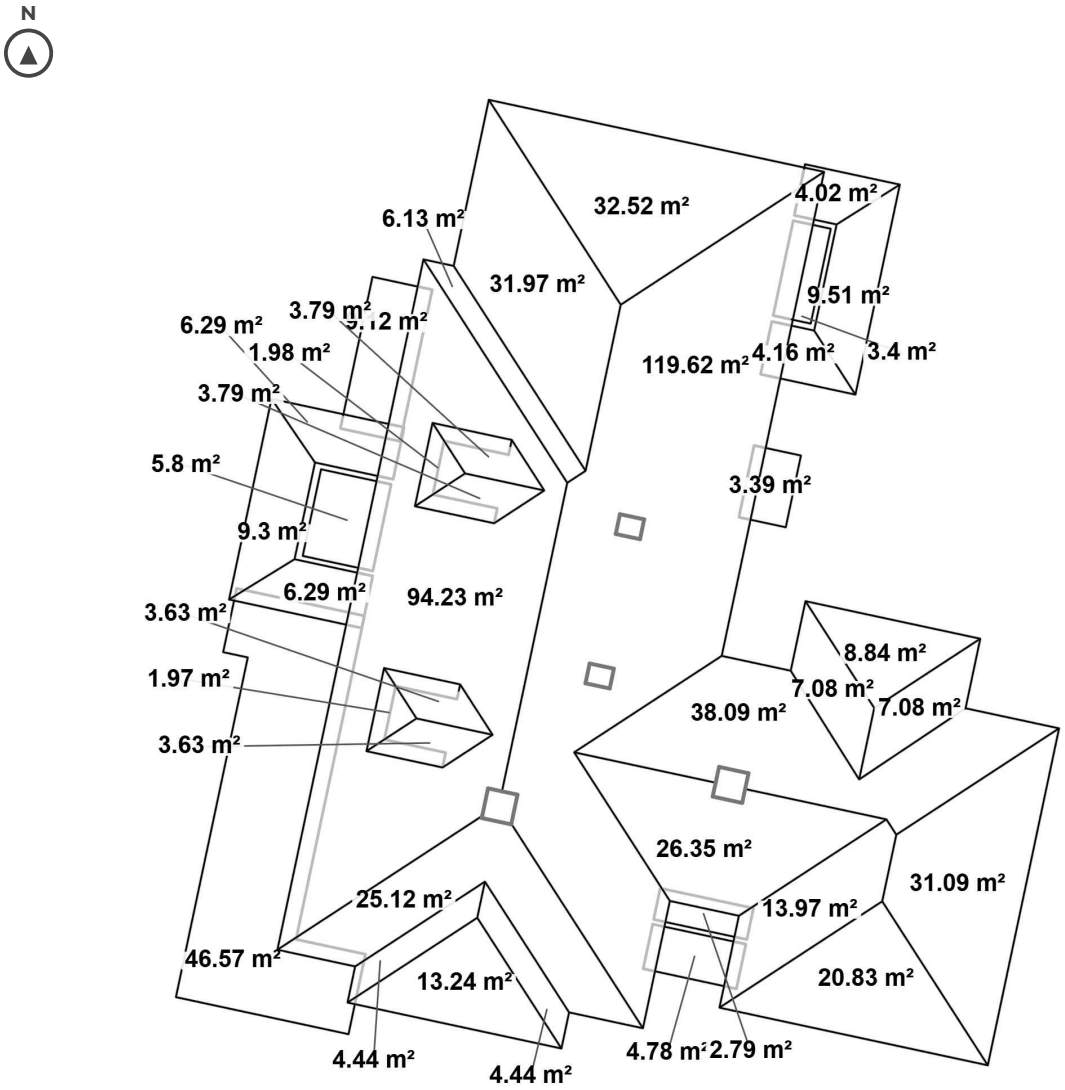

PITCH BREAKDOWN

Pitch	m²	Percent
33.7°	548.16	89%
0.0°	58.56	9%
18.4°	12.51	2%

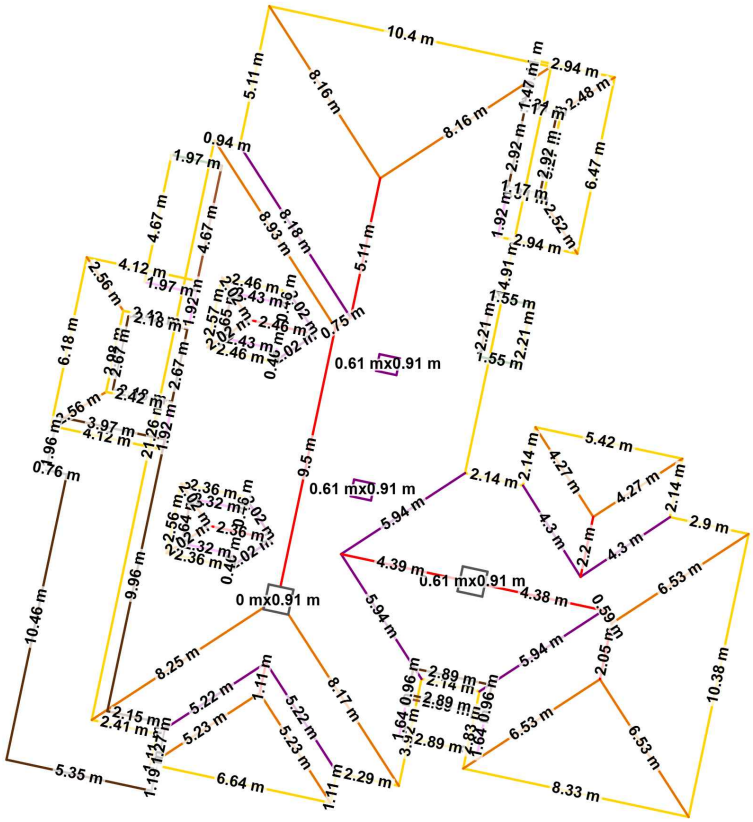

Ridge Hip Valley Rake Eave

Headwall Flashing Sidewall Flashing Transition Parapet Wall

LAYER 1 DETAILS

Facets: 36 **Area (m²) Without Waste: 619.23** **Area (m²) With Waste: 743.08**

Eave: 173.54 m Hip: 99.8 m Valley: 53.14 m Ridge: 33.57 m Sidewall Flashing: 21.99 m

Parapet Wall: 59.51 m Headwall Flashing: 14.9 m Rake: 5.49 m Transition: 3.15 m

Pitch	0.0°	18.4°	33.7°
Area (m²)	58.56	12.51	**548.16**
Percent	9%	2%	**89%**

Waste	0%	15%	18%	20%	22%	25%	30%
Area (m²)	619.23	712.12	730.69	**743.08**	755.46	774.04	805

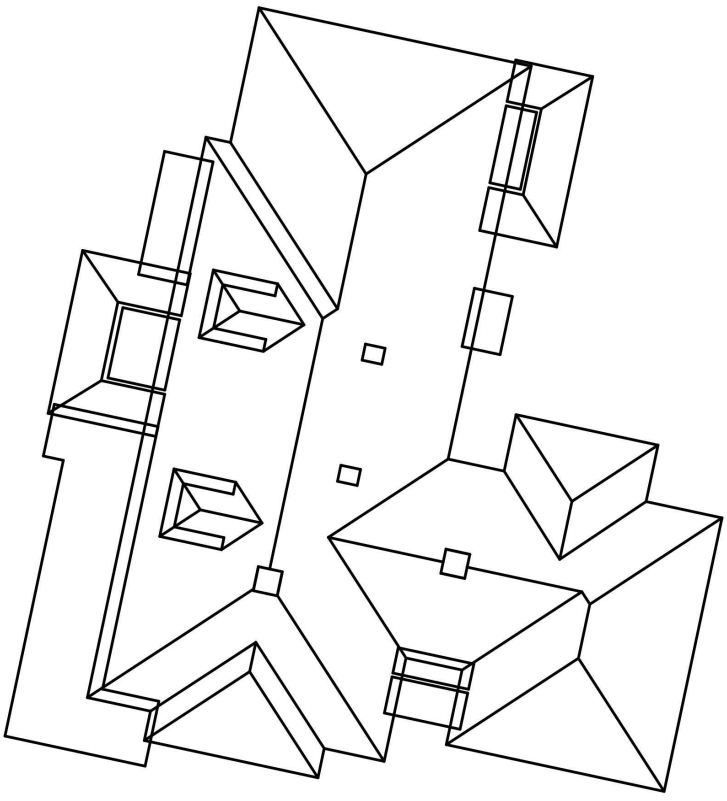

Roof Area	619.23 m²
Facets	36
Pitch	33.7°
Skylights	2
Chimneys	2
Ridge	33.57 m
Hip	99.8 m
Valley	53.14 m
Rake	5.49 m
Eave	173.54 m
Headwall Flashing	14.9 m
Sidewall Flashing	21.99 m
Transition	3.15 m
Parapet Wall	59.51 m
Chimney Back Pan	0.91 m
Chimney Step	3.46 m
Chimney Apron	3.57 m
Counter Flashing	7.95 m

Measurements rounded. Waste guidance only. Installer to verify.

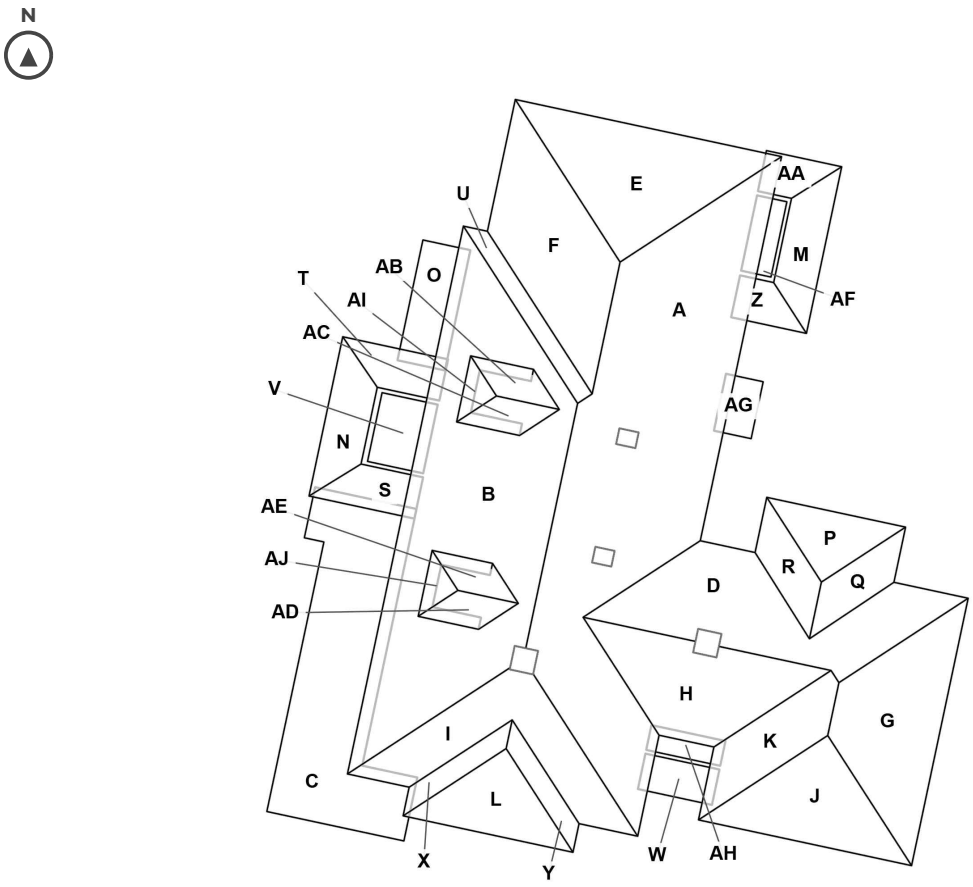

743.04 m² · 8/12 · 36 facets

NOTES